Exhaust system

MD2010
MD2020
MD2030
MD2040

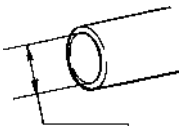

∅ 45 mm
∅ 1.8"

MD22L
MD22P
D2-55

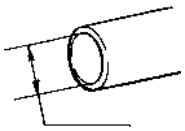

∅ 57 mm
∅ 2.2"

TMD22
TAMD22

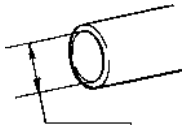

∅ 89 mm
∅ 3.5"

MD2010–2040–MD22P

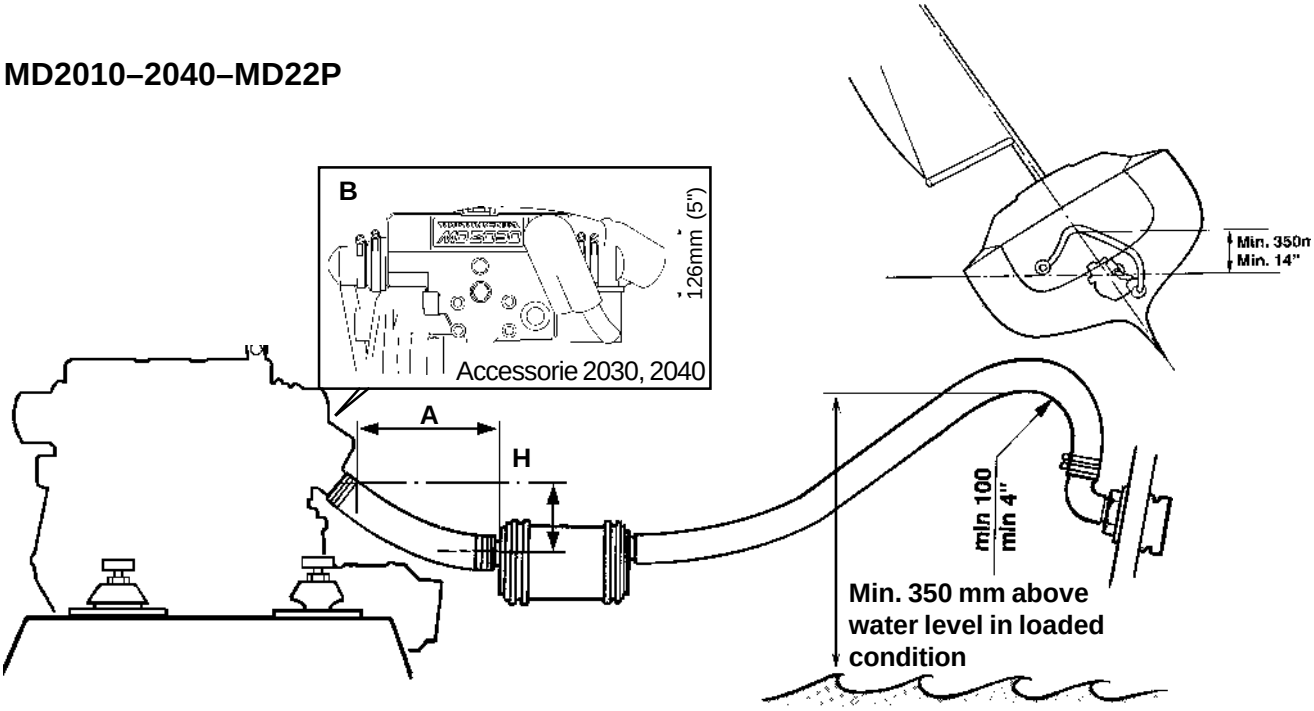

Routing of exhaust hose between silencer – engine outlet.

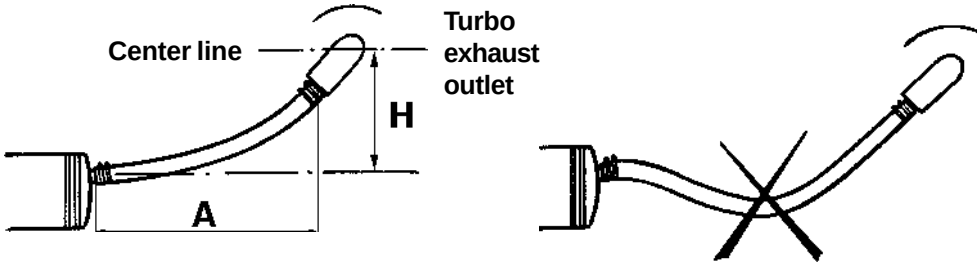

Highest position of silencer in relation to exhaust hose length.

A	H	
	MD2020 – D2-55	**MD22 – TAMD22**
300 mm	**130 mm**	**160 mm**
400 mm	**140 mm**	**170 mm**
600 mm	**170 mm**	**200 mm**
1300 mm*	**200 mm**	**230 mm**

***Support needed to avoid water to stay in hose before silencer.**
If dimension H can not be met, a riser as in B must be installed.

Max exhaust back pressure messurements in bar, kPa (mm Wg)

MD2010 – 2040	MD22L-P	T(A)MD22	D2-55
Max. 20 (2040)	Max. 20 (2040)	Max. 15 (1530)	Min. 15 (1530) Max. 20 (2040)